Alle Rechte vorbehalten/ *All rights reserved*

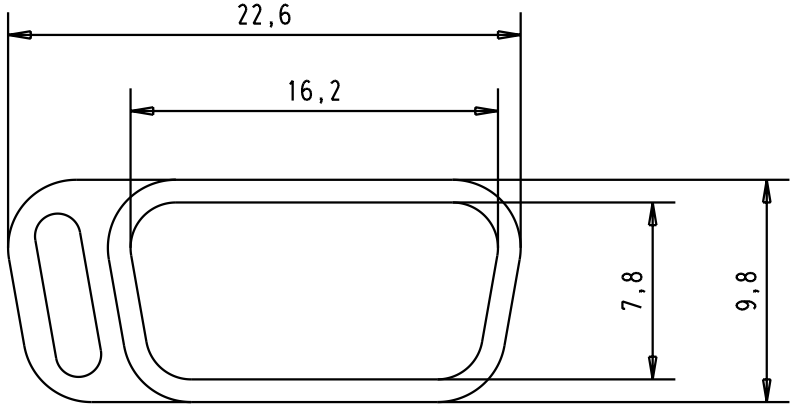

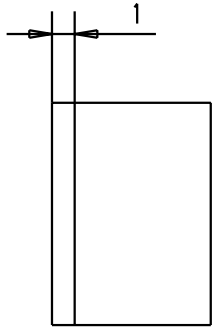

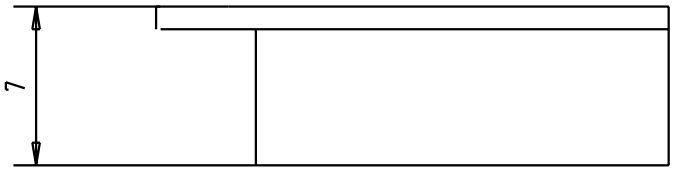

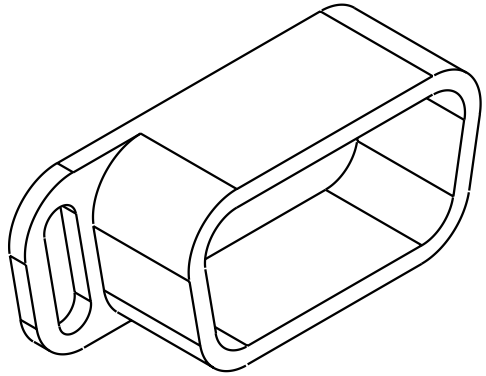

							Dat.	Name		D-Sub, Dust cap, thermoplastic black, for female connector 9 poles	Maßstab/ *Scale*
						Detail.	09-APR-02	CV	All Dim. in mm Orig. Size DIN A 4		3:1
						Insp.					
						Stand.					
09 67 009 0711						HARTING EURL F-95972 Paris				TB 09670090711	Blatt/ *Page* 1
			29768	09-APR-02	CV						
Part number			Mod.	Dat.	Name					Sub.	